BORDEAUX 111
OPERATION MANUAL

BREAKER: V5D
MANUFACTURER: Square D, Schneider
VOLTAGE: 15kV
CURRENT: 1200A-3000A

SAFETY FIRST

Always observe safety precautions and use personal protective equipment (PPE) as required by local site procedures. This equipment is designed to further minimize exposure risk to the operator.

PARTS LIST

1. Smart Drive Bracket (SDB)
2. Tool Adapter Assembly (TAA)
3. Motor Drive Unit (MDU)
4. Two (2) batteries with charger
5. One (1) SR-U Handheld Controller (HHC)
6. 50’ communication cable*
7. Polymer Storage Case

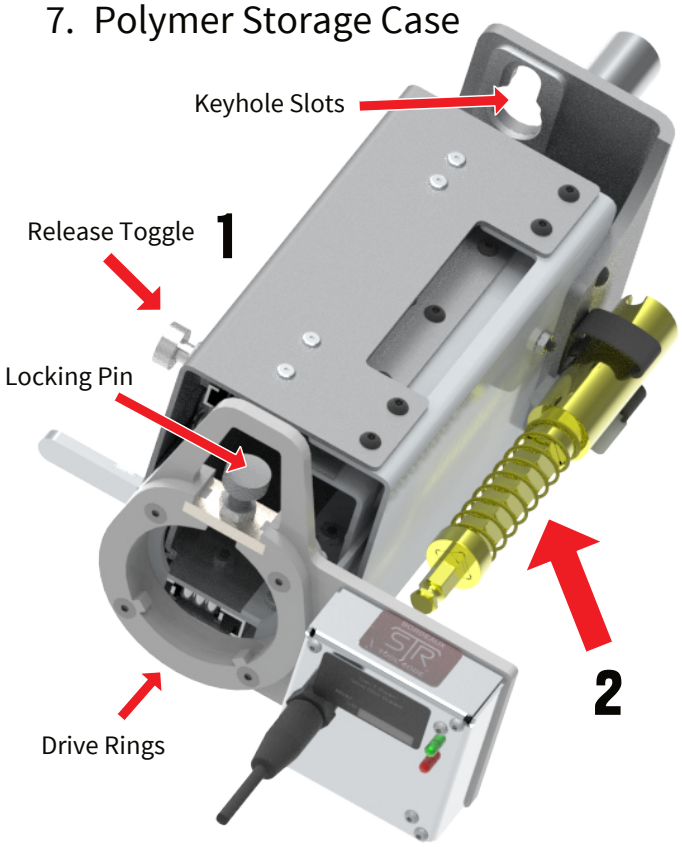











WARNING

This product can expose you to chemicals including Di(2-ethylhexyl), phthalate (DEHP), which is known to the State of California to cause cancer and birth defects or other reproductive harm. For more information go to www.p65warnings.ca.gov.

SETUP SEQUENCE

SMART DRIVE BRACKET (SDB)

1. Ensure that cubicle, Smart Drive Bracket (SDB) are both labeled with the BORDEAUX color code.
2. Suspend SDB from cubicle kit using installed shoulder nuts. SDB will align securely with keyhole slots.
3. Push SDB toward cubicle until it locks into place.

MOTOR DRIVE UNIT (MDU) & TOOL ADAPTER ASSEMBLY (TAA)

1. Using Quick Change Coupling, insert Tool Adapter Assembly (TAA) into Motor Drive Unit (MDU). Assure that TAA is secured before proceeding.
2. Attach fully charged battery to MDU.
3. Set the locking pin on SDB to an open position and insert MDU & attached TAA into the drive rings on SDB.
4. Align and engage the MDU and TAA with the racking shaft. Once aligned, release locking pin to hold MDU in place.
5. Connect SDB communication cable to port in MDU. Note: Red line on communication cables indicates correct alignment with port.

HANDHELD CONTROLLER (HHC)

1. Connect 50’ Communication Cable to second port in MDU.
2. Connect other end of 50’ Communication Cable to Handheld Controller (HHC)*.
3. Move a safe distance away from the breaker.

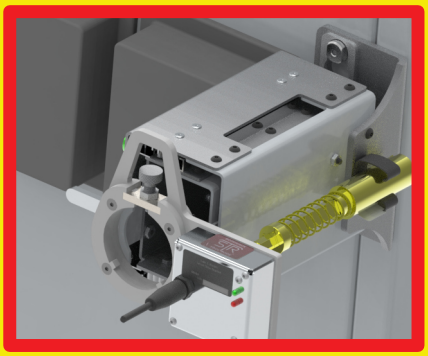

SDB SUSPENDED FROM CUBICLE USING CUBICLE KIT SHOULDER NUTS



MDU PROPERLY FITTED WITH TAA

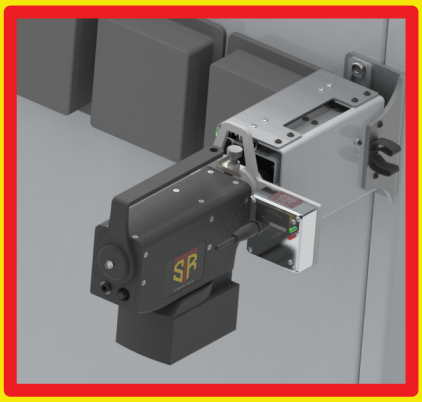

MDU WITH ATTACHED TAA PROPERLY ENGAGED WITH DRIVE RINGS AND LOCKING PIN, READY FOR SDB AND HHC COMMUNICATION CORDS

*Note: Multiple cables can be used to increase safe distance from breaker. Additional cables sold separately. Contact Remote Solutions LLC for more information.

REMOTE SOLUTIONS, LLC
2475 N. Jackrabbit Avenue · Tucson, AZ 85745
(520) 628-4378 · FAX (520) 628-4568 ·
sales@Safe-T-Rack.com · www.Safe-T-Rack.com

POWER ON

1. Twist the E-Stop switch on HHC to activate the system.
2. Several screens will flash as unit powers up. Once HHC has powered up, **verify correct application screen is displayed.**

BATTERY REQUIREMENT

Note: System will ask to verify battery level. Check battery level is at 4 bars before attempting to rack. If racking multiple breakers, please verify battery level between each racking attempt.

SYSTEM OPERATION

1. Follow the on-screen prompts to complete racking procedure. Navigate selections using perimeter buttons on HHC (backlit in green). “Up” and “Down” will toggle through options on screen. “Right” and “Left” will confirm selections.
2. Navigating HHC in this manner, select current location and desired destination of breaker. When selection is highlighted, click center button (backlit in red) to confirm selection. **This will initiate the racking process.**
3. System will perform action as selected, displaying progress on screen.
4. Upon successful operation, HHC will display a completed racking screen.



POWER DOWN & STORAGE

1. Power down the unit by pressing the E-Stop button. Remove battery from MDU.
2. Unplug power cord and HHC communication cord from SDB.
3. Remove TAA from MDU and return it to storage clip on SDB.
4. Stow 50’ Communication Cable, HHC, MDU, and batteries in storage case.
5. Remove SDB from cubicle using release toggle and store in provided polymer case.

CARE & MAINTENANCE

To ensure longevity of the Portable Kit and SDB, store the tools in the provided polymer case in a dry, temperate environment. The tools are weather resistant but should be used with care in rain and snow.

Remote Solutions reserves the right to change or update product or documentation without prior notice.

ERROR RECOVERY

If a problem occurs, programmed recoveries will happen automatically and the system will attempt to recover the breaker to a known position.

When racking in/out, if an obstruction or mechanism failure occurs, the system will attempt to recover the breaker to a safe position. Actions will be displayed on HHC with an asterisk (*) in front of them. When the HHC has completed recovery operations, HHC will display current expected location of the breaker. Note the expected location and approach the breaker with caution. Determine cause of the failure and remedy the situation prior to attempting additional remote racking.

NOTE: Attempting to stop or shutting down the system mid-process once it has started is not recommended, as this will leave the breaker in an unknown position. The Remote Racking System will only operate from known positions.



EMERGENCY STOP

The red E-Stop button on the HHC serves as both the power and Emergency Stop button. If an E-stop is initiated, the system will shut down. Operator must then manually recover the breaker to a known position. Follow all safety procedures and wear appropriate PPE when recovering a breaker manually.

For any questions, concerns, information, or missing/ replacement parts, contact Remote Solutions below or follow the QR link to our website.

SAFE-T-RACK®
by Remote Solutions LLC

2475 N. Jackrabbit Avenue · Tucson, AZ 85745 · (520) 628-4378
FAX (520) 628-4568 · sales@Safe-T-Rack.com · www.Safe-T-Rack.com